ISM / LoRa SMD Antenna

SZC-C-0M01

ISM / LoRa: **863 – 928 MHz**

Description

A highly compact yet high-performance solution for embedded design. Synzen have created the optimal solution for ISM/LoRa/ SigFox/Weightless P applications that simplify the design in process and allows you to focus on the product development.

This antenna resonates best when placed at the end of the longest PCB edge or in a corner and produces a near omni directional pattern.

- For ISM/LoRa/ SigFox/Weightless P Applications 863-928MHz
- Highly Resistant to detuning
- Clean resonance with no unwanted out of band response.
- SMD component supplied in Tape and reel
- High performance yet ultra-small form factor
- Ideal for smaller designs.
- Suitable for sealing with resin / potting compounds
- Standard optimal clearance or high-density clearance for smaller designs

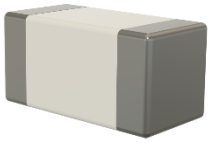

Applications

Industrial/Scientific/Medical
Access Point
Smart Grid

M2M Industrial
Headsets

Smart Meters
Healthcare

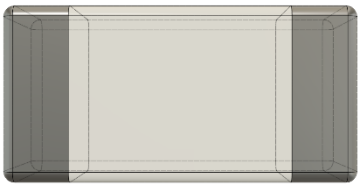

Copyright Synzen 2020

General Specifications

Mechanical Specifications

Part Number	SZC-C-0M01
Name	VEGA
Dimensions	1.6 x 0.8 x 0.8 (mm)
Required Clearance area	25.0 x 10.0 (mm) Optimal 15.0 x 11.0 (mm) High Density
Weight	<0.2g
Antenna Type	Surface Mount Device

RF Specifications*

Frequency Range	863 – 915MHz
Average Efficiency (Linear)	>65%
Peak Gain	1.2dBi
S11 (max)	<-8.5dB
VSWR (max)	2.1:1
Impedance	50 Ω
Polarization	Linear

*All performance stated is measured of SZDV-C-0M01 evaluation kit

Environmental Specifications

Operational Temperature	-40 to +125 (°C)
Storage Temperature	-10 to +40 (°C)
Relative Humidity	≤75%

Copyright Synzen 2020

RF Characteristics

S11 Parameter

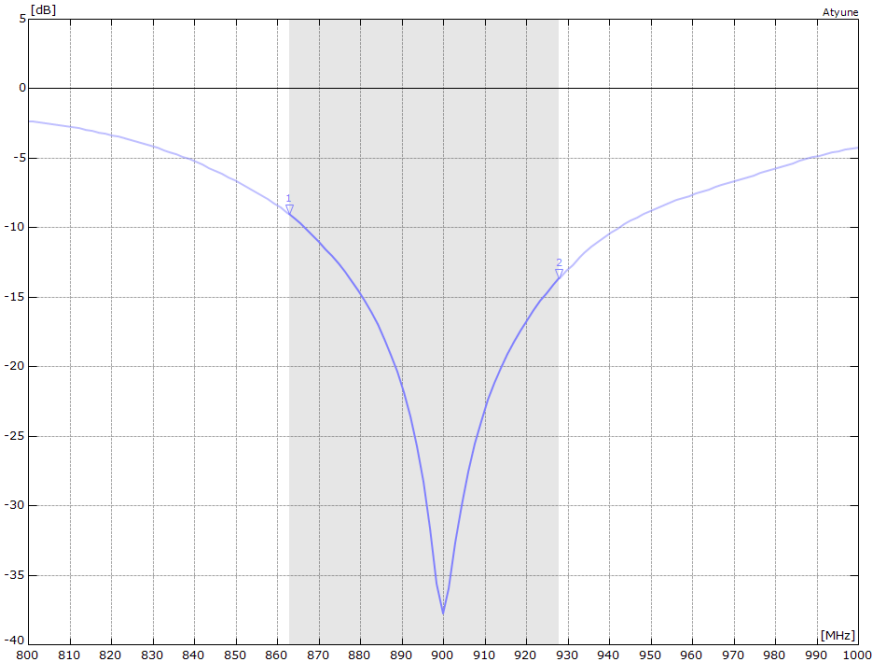

VSWR

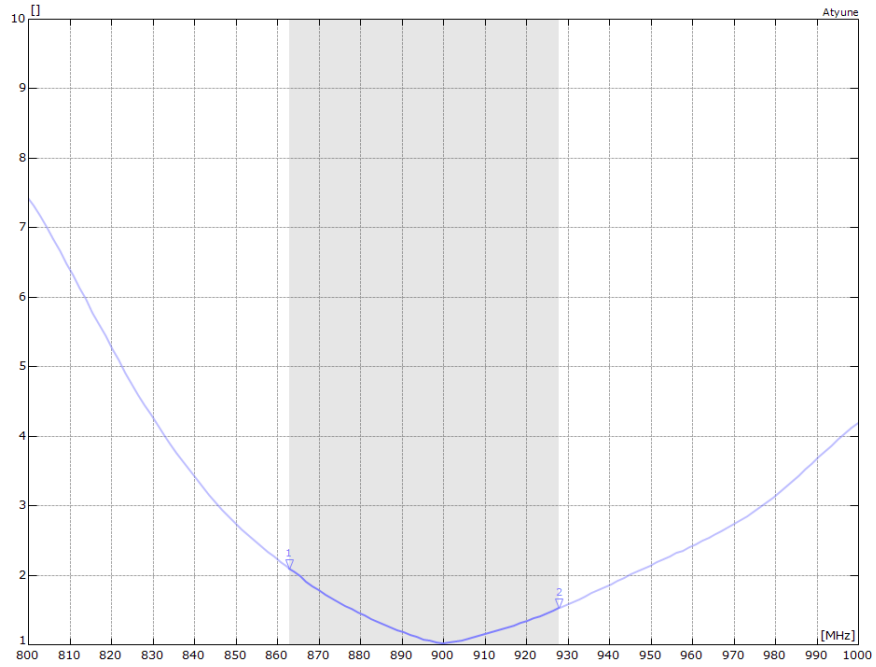

Copyright Synzen 2020

Radiated Performance

2D Polar Plot

The data shown was measured on Synzen DVK (SZDV-C-0M01)

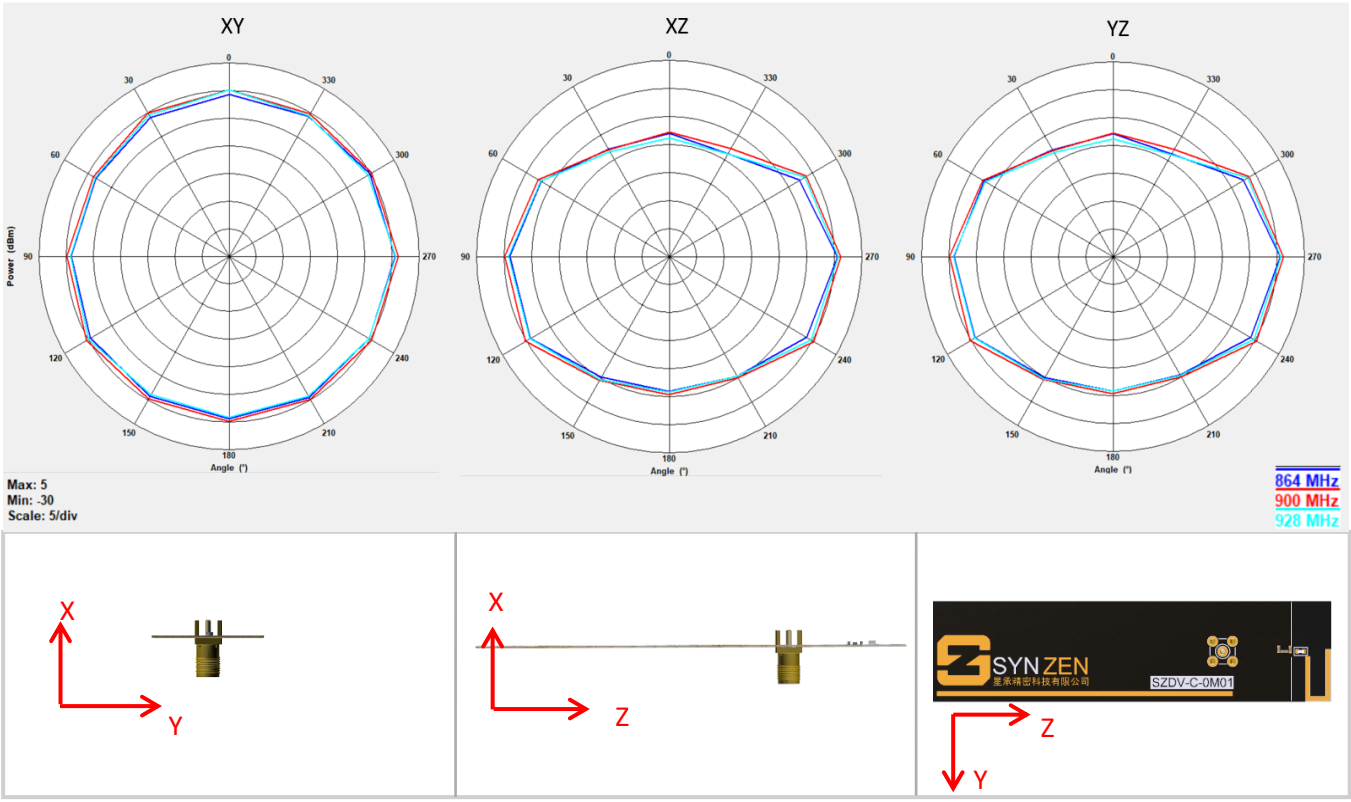

Radiated Performance

3D Radiation Pattern

The data shown was measured on Synzen DVK (SZDV-C-0M01). The frequency point shown here is 868MHz.

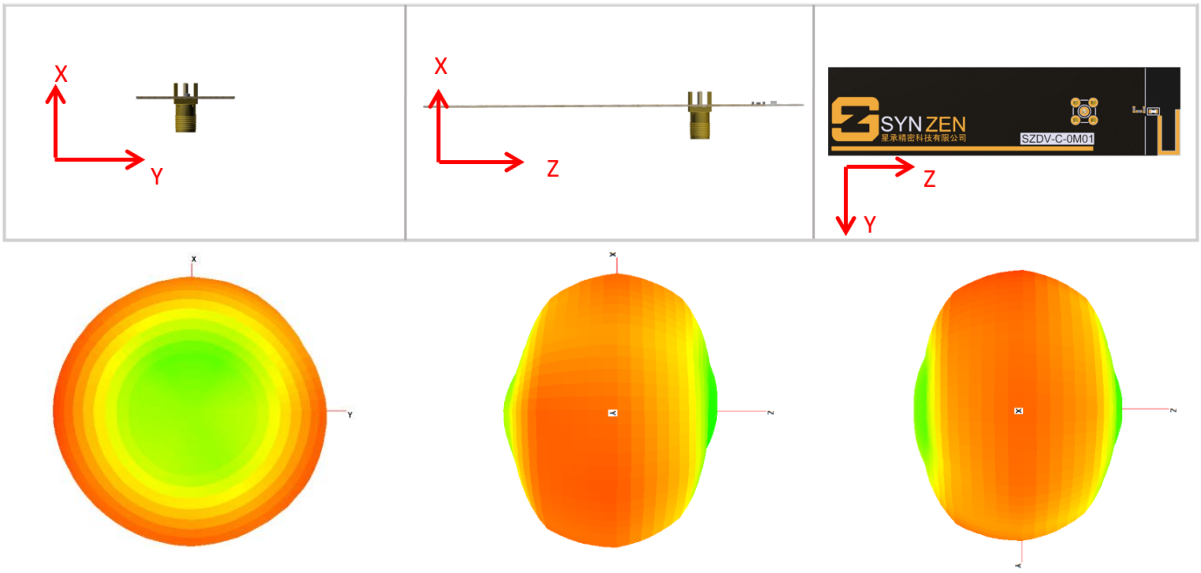

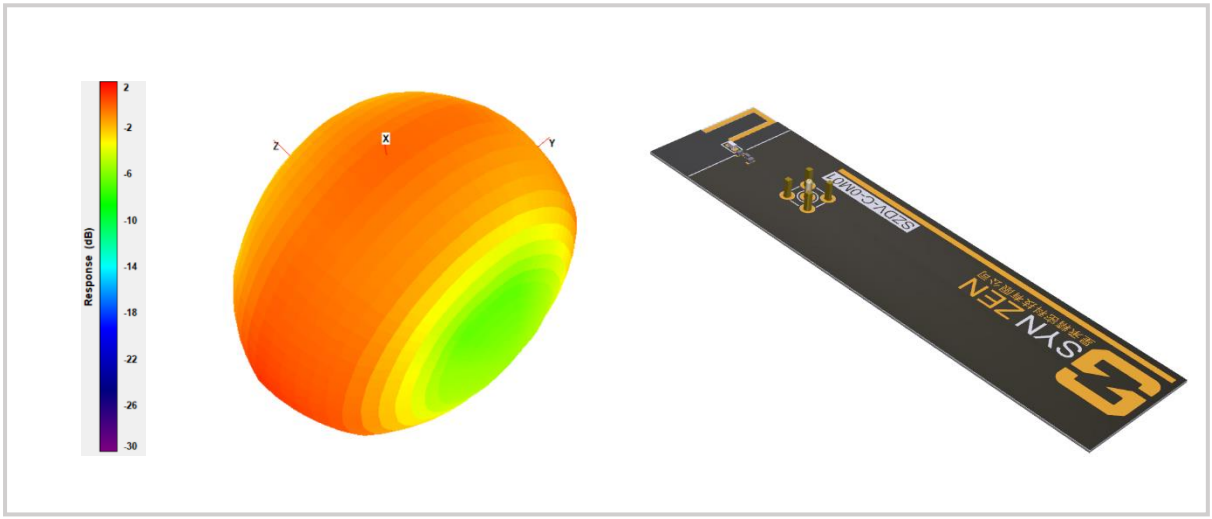

Mechanical

Antenna Mechanical Drawing

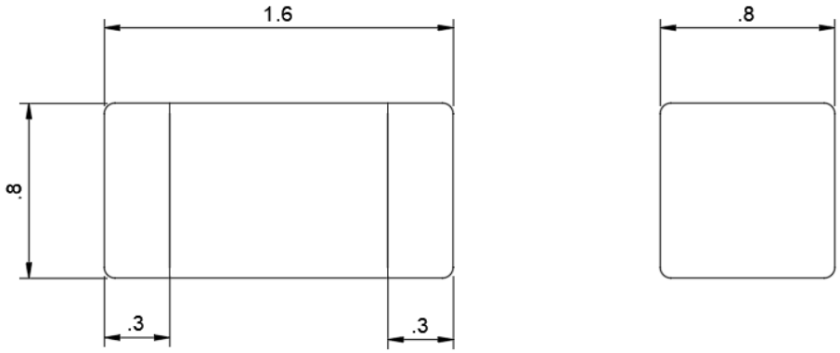

All dimensions in mm

Required Host PCB Footprint

The host PCB requires the footprint shown below. PCB library files and DXF is available from our website www.synzen.com.tw/products.

The required clearance for the host PCB is 14 x 10 (mm) on all layers.

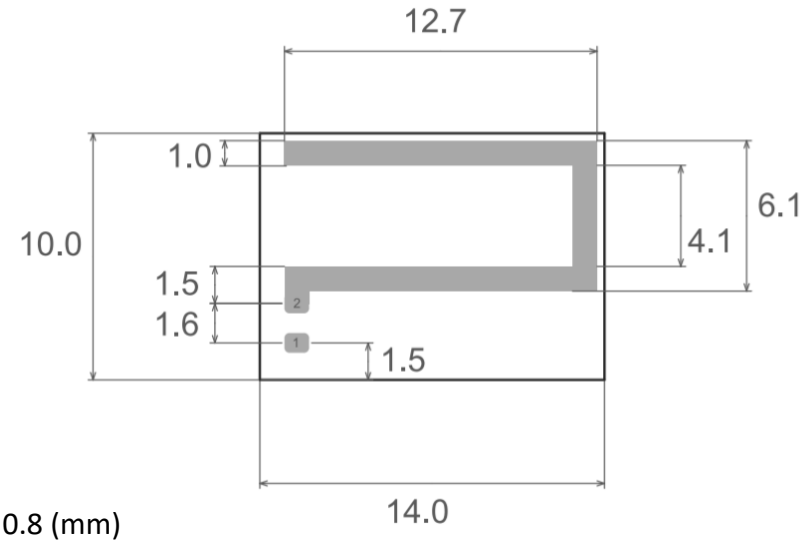

Pins 1,2 = 1.0 x 0.8 (mm)
Trace = 1.0mm width

All dimensions in mm

Copyright Synzen 2020

Antenna Pinout

SZP-C-0M01 Schematic Symbol

The schematic symbol for the antenna is shown below with a description of each pin.

Pin	Description
1	Feed
2	To precalculated trace option

PCB Layout Requirements

Placement and Clearance

The antenna is designed to function placed at the end of the longest PCB edge. Where possible the top and bottom layers of the PCB should be flooded with GND, this optimizes the antenna performance.

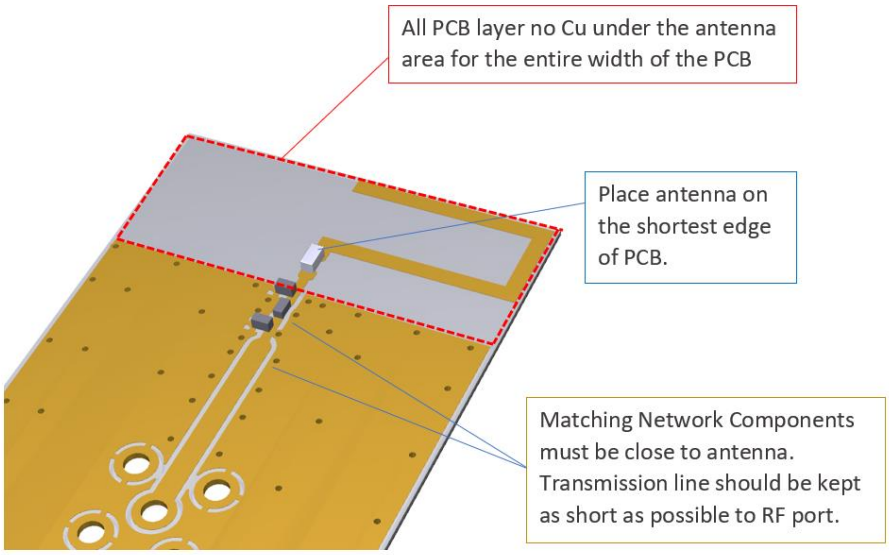

High Density Footprint Option

A corner placement is possible on designs that cannot accommodate the standard footprint and clearance. This space saving option is available upon request from Synzen at www.synzen.com.tw/products

Footprint: SZC-HDC-0M01

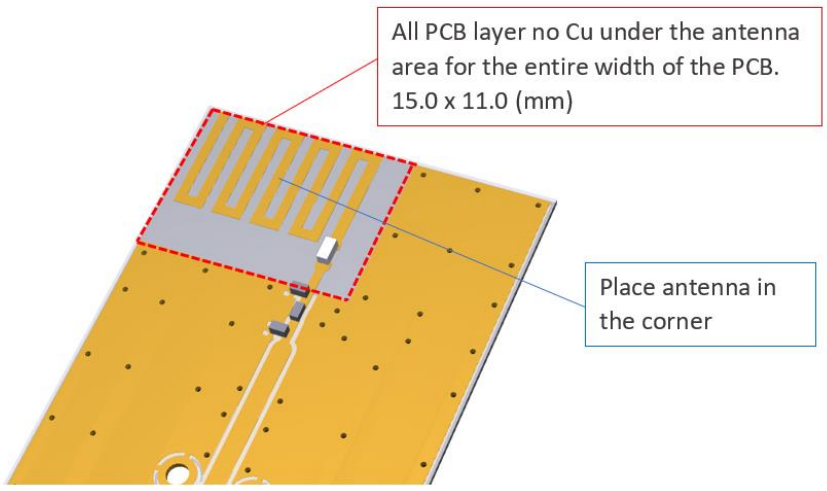

Copyright Synzen 2020

Development Kit

SZDV-C-0W01 Development Kit

The SZDV-C-0M01 development kit is a PCBA with the antenna (SZC-C-0M01) fitted and optimised with a matching network. Connection to the antenna is made using the fitted female SMA connector.

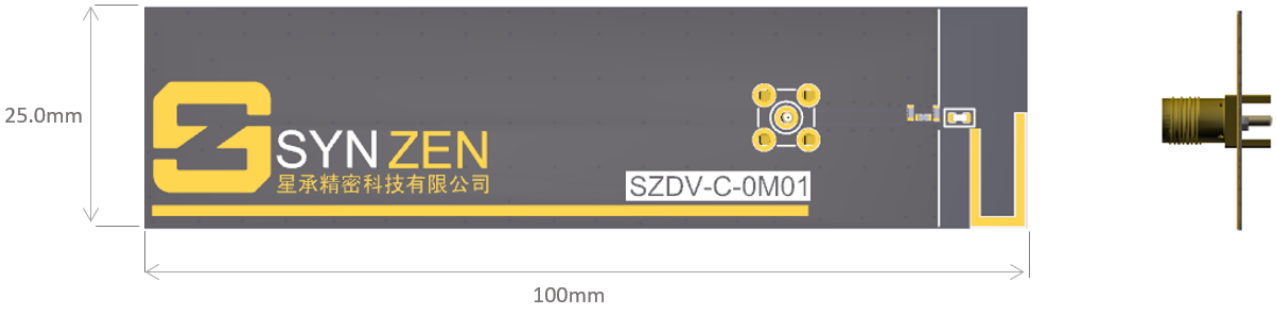

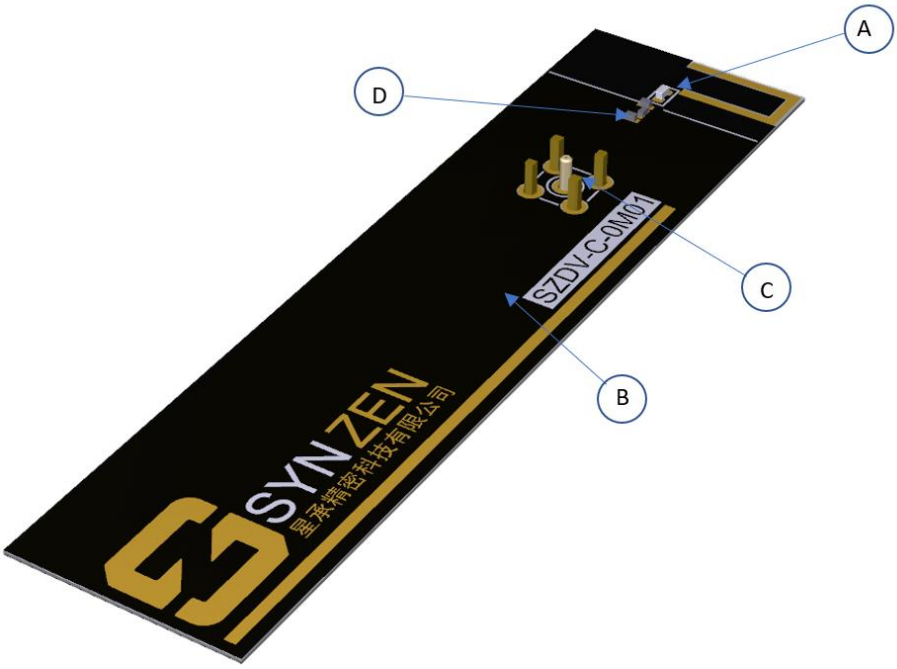

A	SZC-C-0M01-1 (Antenna)
B	Host PCB
C	SMA Connector
D	Matching Circuit

Development Kit Schematic

Development Kit Matching Circuit

The circuit of the DEV kit along with the BOM is shown below. The matching network topology should be used on the device host PCB although the matching values will be dependent on the host PCB and device environment. Synzen provide a matching service to optimise your device to ensure the best performance, please contact sales@synzen.com.tw for more information.

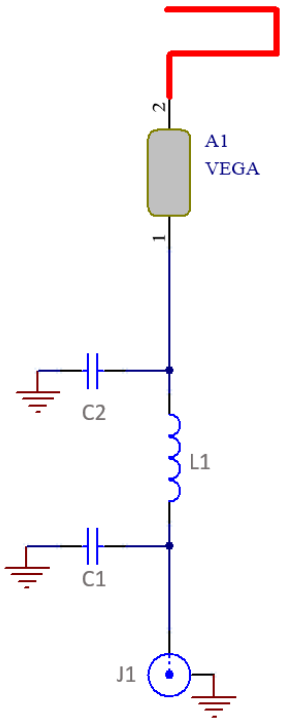

Designator	Component Type	Value	Size	Manufacturing Part No.
A1	Antenna	VEGA	-	SZC-C-0M01
C1	Capacitor	Not Fitted	0402	Do Not Place
C2	Capacitor	1.5pF	0402	GCM1555C1H1R5JA16D
L1	Inductor	1.5nH	0402	LQG15HS1N5S02D
J1	SMA Connector	-	-	ACE solution A3SAFTST135

Copyright Synzen 2020

Soldering

Reflow Profile

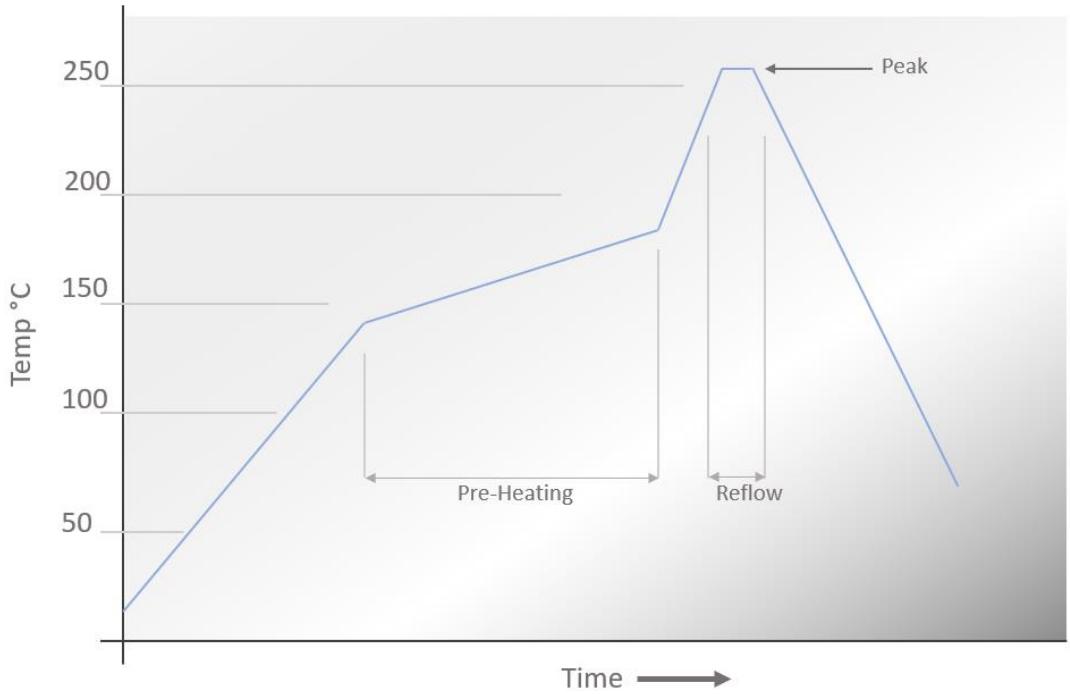

Pre-Heating	130 - 180°C	50 to 190 seconds
Reflow	>220 °C	50 to 160 seconds
Peak Temperature	260 °C	15 to 45 seconds

Copyright Synzen 2020

Packaging

Tape and Reel

		A0	B0	W	T	T1	P0	P1	P2	D0	E1	E2	F	Tape Type 1a	VPE / packaging unit
tolerance		typ.	typ.	+0,3/ -0,1	typ.	max.	±0,1		+0,05	+0,1 / -0,0	±0,1	min.	±0,05		pcs.
size	0402	0.62	1.15	8.00	0.60	0.10	4.00	2.00	2.00	1.50	1.75	6.25	3.50	Polystyrene	10000

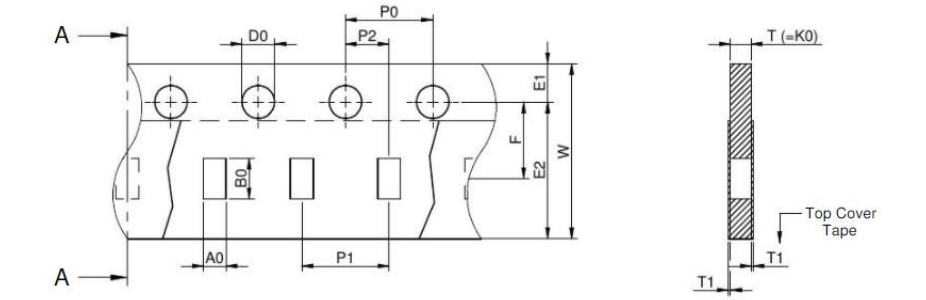

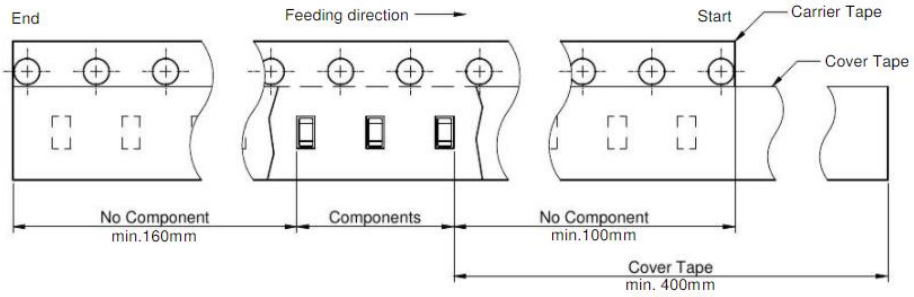

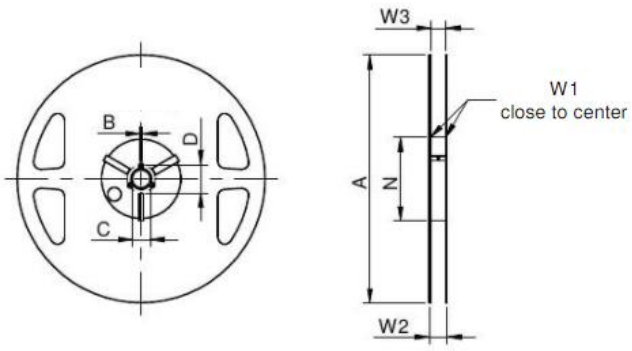

A (mm)	B (mm)	C (mm)	D (mm)	N (mm)	W1 (mm)	W2 (mm)	W3 (mm)	W3 (mm)	Material
± 2.0	min.	min.	min.	min.	+1,5	max.	min.	max.	
178	1.5	12.8	20.2	50	8.4	14.4	7.9	10.9	Polystyrene/ Polyurethane

Copyright Synzen 2020

Environmental

Material Regulation

The antenna has been tested to conform to RoHS requirements. A certificate of conformance is available upon request.

Copyright Synzen 2020

Synzen Precision Technology Ltd

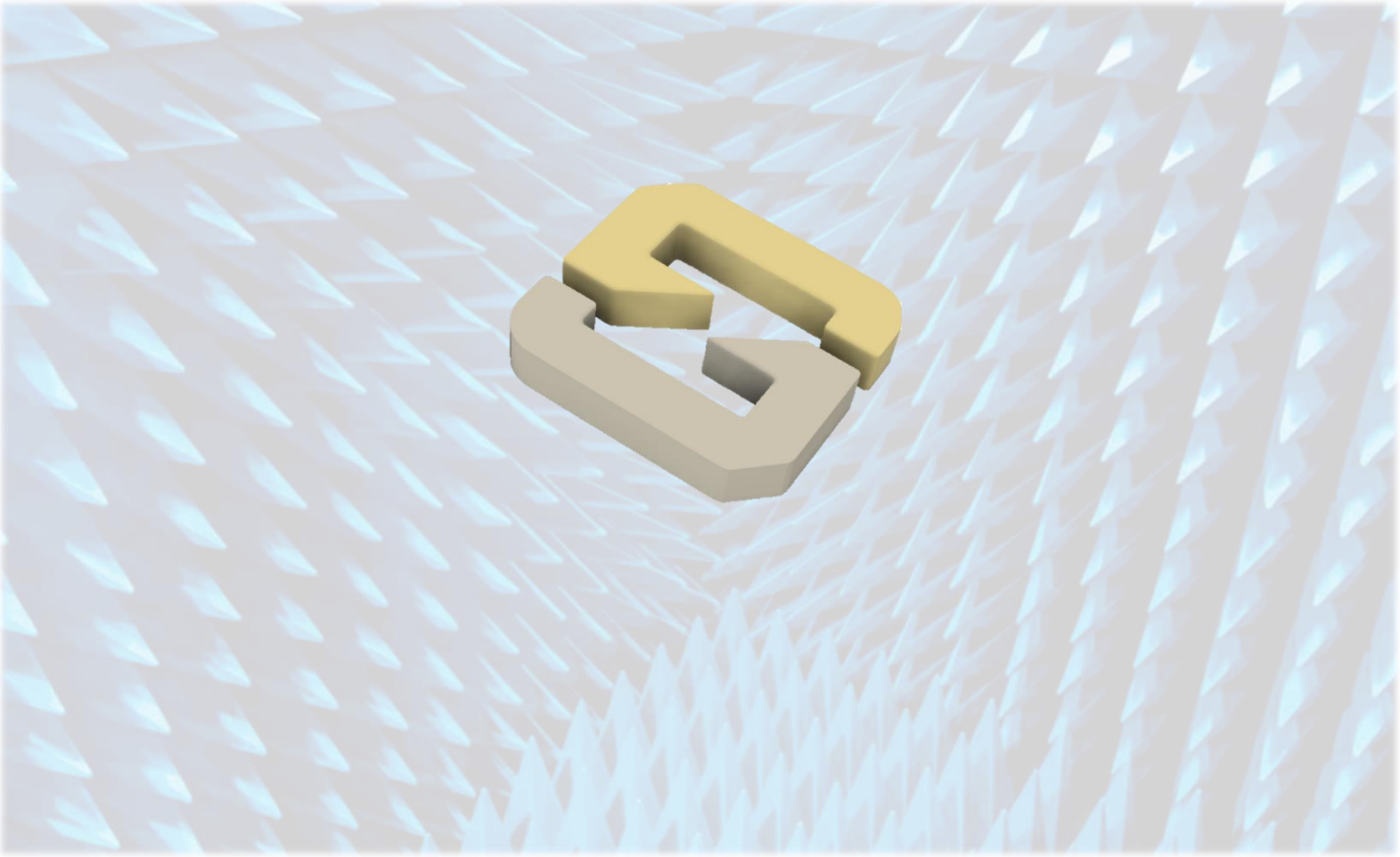

Synzen Precision Technology Ltd makes no warranties based on the accuracy or completeness of the contents of this document and reserves the right to make changes to specifications and product descriptions at any time without notice. Synzen reserves all rights to this document and the information contained herein. Reproduction use or disclosure to third parties without express permission is strictly prohibited.

SYNZEN www.synzen.com.tw

Synzen, 4F, No.58, Zhouzi St, Neihu Dist., Taipei City, Taipei, 11493.

Contact: Sales@synzen.com.tw