SP TECHNOLOGY

PRODUCT DATASHEET

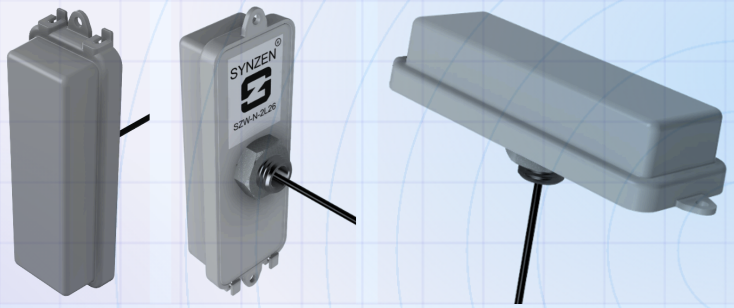

LTE / ISM PANEL MOUNT

OBERON

ISM / 4G LTE Panel Mount Antenna

SZW-N-2L26

FREQUENCY	PEAK GAIN	CONNECTOR	SIZE
430 to 2690 MHz	Up to 3.77 dBi	SMA Plug, 1.5 m	130.0 × 45.0 × 27.0 mm

ISM 433 / LTE 450	430 to 480 MHz	Covers ISM 433, B31, B72, B73
LOW BAND	698 to 960 MHz	Covers B5, B8, B12, B13, B14, B17, B18, B20, B26, B27, B28, B29, ISM 868 / 915
L BAND	1427 to 1518 MHz	Covers B21, B32, B74, B75, B76
MID BAND	1710 to 2200 MHz	Covers B1, B2, B3, B4, B9, B23, B35, B39, B66
2.3 GHZ	2300 to 2400 MHz	Covers B40
2.6 GHZ	2490 to 2690 MHz	Covers B7, B38, B41

1 Introduction

OBERON, 4G LTE / ISM Panel Mount antenna for global cellular coverage. Suitable for mounting on metallic or non-metallic surfaces.

Features

- Ground plane independent omni-directional radiation patterns
- UV stabilized impact resistant material
- Single hole installation with optional screw fixing
- Alternate cable lengths and connectors available upon request, contact sales@synzen.com.tw

Applications

- Automotive
- Smart City
- Smart Home
- Industrial
- Remote Monitoring
- Remote Sensors

2 Mechanical Specifications

Part Number	SZW-N-2L26
Name	OBERON
Dimensions (mm)	130.0 × 45.0 × 27.0
Weight	<10 g
Antenna Type	Panel Mount with optional screw fixings
Cable Length	1.5 m*
Cable Type	RG174
Connector	SMA Plug
Color	RAL 7035
Material	Impact resistant, UV stabilized Polypropylene Copolymer

**Alternate cable lengths available*

3 RF Specifications

Band	Frequency Range (MHz)	Avg Efficiency (%)	Peak Gain (dBi)	Impedance	Polarization
ISM 433 / LTE 450 / B31, 72, 73	430 to 480	>20	-4.50	**50 Ω**	**Linear**
ISM 868 / 915	863 to 928	>60	2.73		
5G NR / 4G LTE B5, 8, 12, 13, 14, 17, 18, 20, 26, 27, 28, 29	698 to 960	>50	3.77		
5G NR / 4G LTE B21, 32, 74, 75, 76	1427 to 1518	>50	1.29		
5G NR / 4G LTE B1, 2, 3, 4, 9, 23, 35, 39, 66	1710 to 2200	>55	1.56		
5G NR / 4G LTE B40	2300 to 2400	>60	3.18		
5G NR / 4G LTE B7, 38, 41	2490 to 2690	>55	3.43		

4 Environmental

Operational Temperature	-40 to +85°C
Storage Temperature	-10 to +40°C

5 5G NR / 4G LTE Supported Band List

Band	Freq. Band (MHz)	Uplink (MHz)	Downlink (MHz)	Supported
1	2100	1920 to 1980	2110 to 2170	YES
2	1900	1850 to 1910	1930 to 1990	YES
3	1800	1710 to 1785	1805 to 1880	YES
4	1700	1710 to 1755	2110 to 2155	YES
5	850	824 to 849	869 to 894	YES
7	2600	2500 to 2570	2620 to 2690	YES
8	900	880 to 915	925 to 960	YES
9		1749.9 to 1784.9	1844.9 to 1879.9	YES
10	1700	1710 to 1770	2110 to 2170	YES
11	1500	1427.9 to 1447.9	1475.9 to 1495.9	YES
12	700	699 to 716	729 to 746	YES
13	700	777 to 787	746 to 756	YES
14	700	788 to 798	758 to 768	YES
17	700	704 to 716	734 to 746	YES
18	850	815 to 830	860 to 875	YES
19	850	830 to 845	875 to 890	YES
20	800	832 to 862	791 to 821	YES
21	1500	1447.9 to 1462.9	1495.9 to 1510.9	YES
22	3500	3410 to 3490	3510 to 3590	YES
24	1600	1626.5 to 1660.5	1525 to 1559	NO
25	1900	1850 to 1915	1930 to 1995	YES
26	850	814 to 849	859 to 894	YES
27	800	807 to 824	852 to 869	YES
28	700	703 to 748	758 to 803	YES
29	700	N/A	717 to 728	YES
30	2300	2305 to 2315	2350 to 2360	YES
31		452.5 to 457.5	462.5 to 467.5	YES
32	1500	N/A	1452 to 1496	YES
33	2100	1900 to 1920		YES
34	2100	2010 to 2025		YES

Band	Freq. Band (MHz)	Uplink (MHz)	Downlink (MHz)	Supported
35	1900	1850 to 1910		YES
36	1900	1930 to 1990		YES
37		1910 to 1930		YES
38	2600	2570 to 2620		YES
39	1900	1880 to 1920		YES
40	2300	2300 to 2400		YES
41	2500	2496 to 2690		YES
42	3500	3400 to 3600		NO
43	3700	3600 to 3800		NO
44	700	703 to 803		YES
45	1500	1447 to 1467		YES
46	5200	5150 to 5925		NO
47	5900	5855 to 5925		NO
48	3600	3550 to 3700		NO
50	1500	1430 to 1517		YES
51	1500	1427 to 1432		YES
65	2100	1920 to 2010	2110 to 2200	YES
66	1700	1710 to 1780	2110 to 2200	YES
67	700	N/A	738 to 758	YES
68	700	698 to 728	753 to 783	YES
69	2600	N/A	2570 to 2620	YES
70	2000	1695 to 1710	1995 to 2020	YES
71		663 to 698	617 to 652	YES
72		451 to 456	461 to 466	YES
73		450 to 455	460 to 465	YES
74		1427 to 1518		YES
77		3300 to 4200		NO
78		3300 to 3800		NO
79		4400 to 5000		NO
85		698 to 716	728 to 746	YES

6 RF Characteristics

S11 Parameter

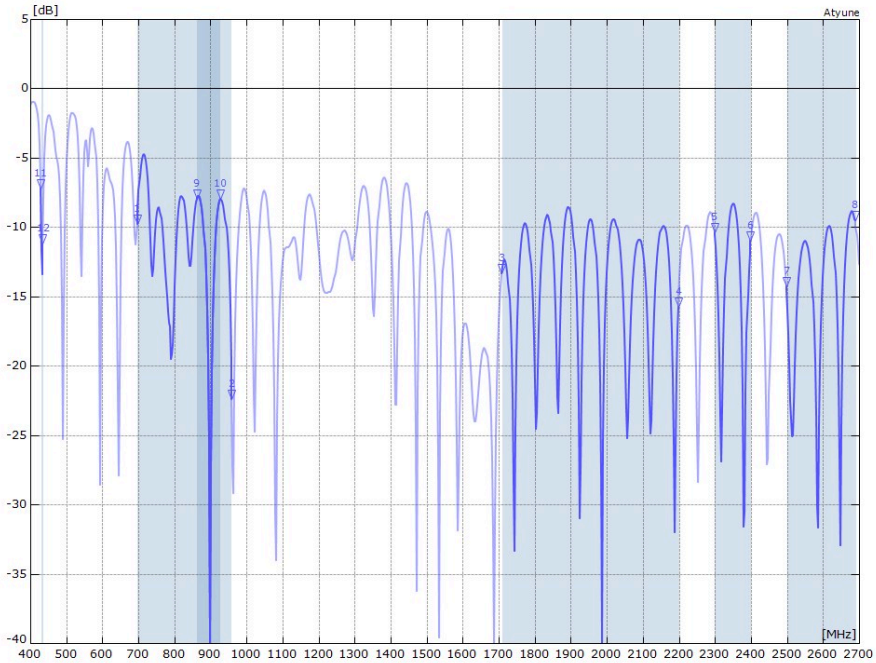

VSWR

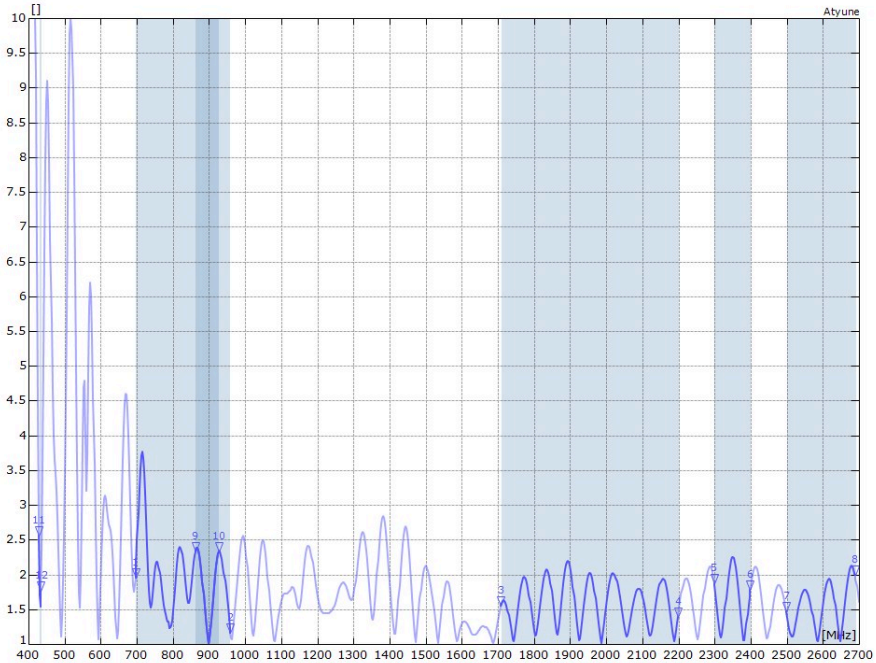

7 Antenna Performance

Efficiency

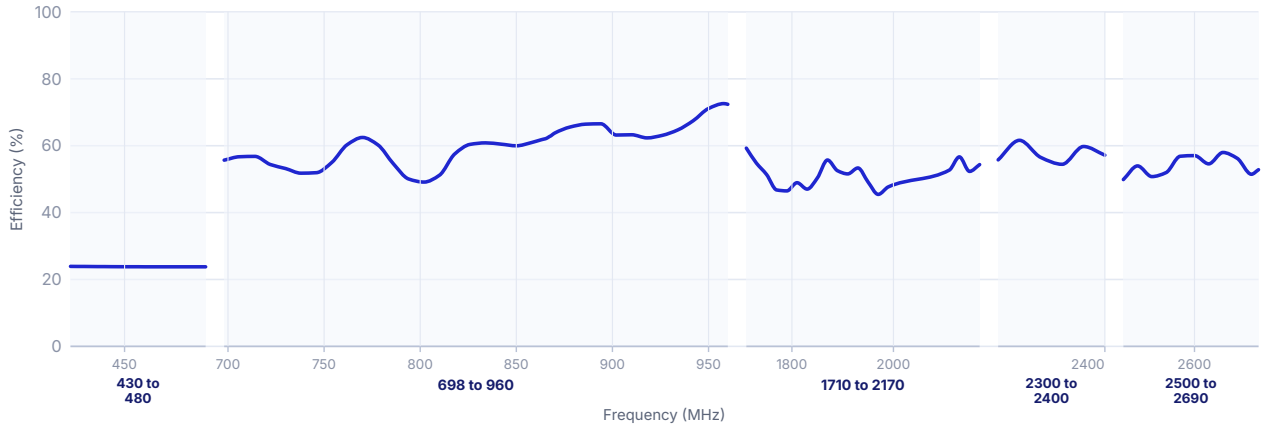

Peak Gain

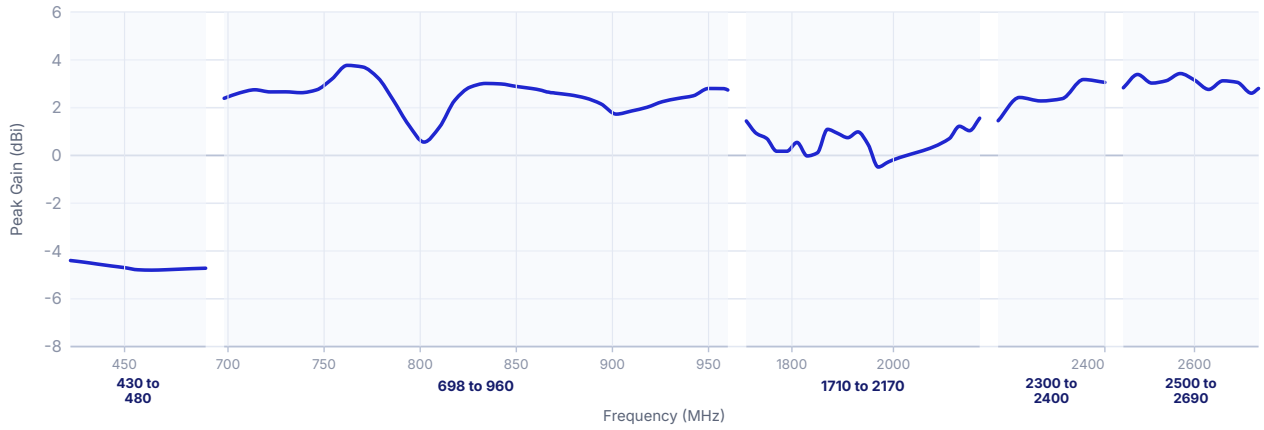

Average Gain

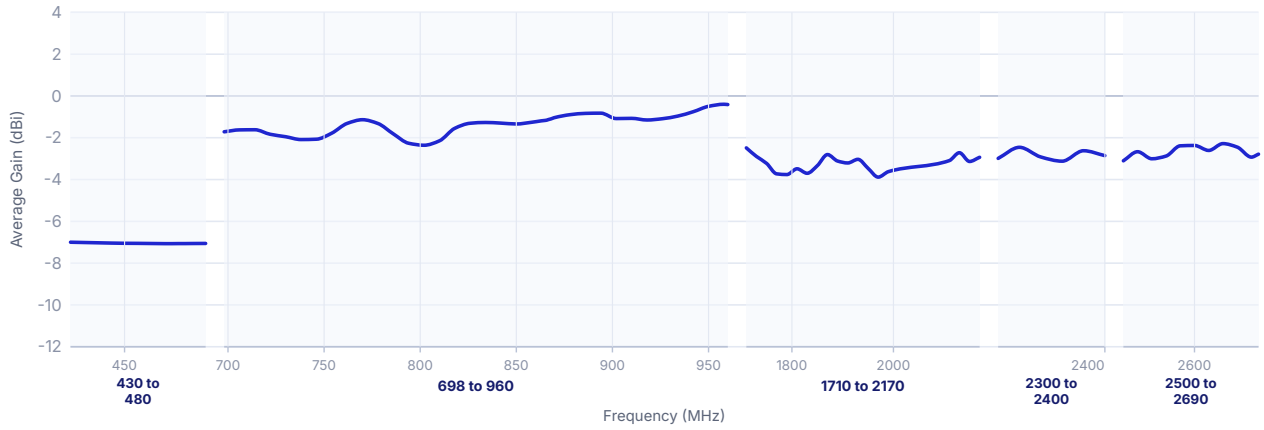

8 2D Polar Plot 698 to 2690 MHz

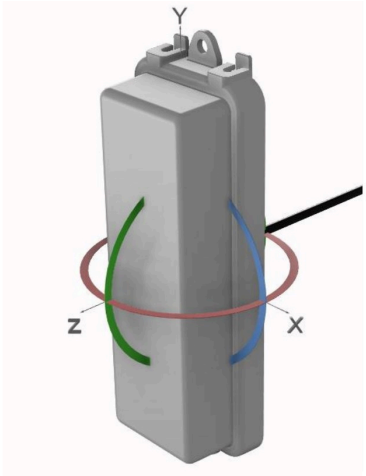

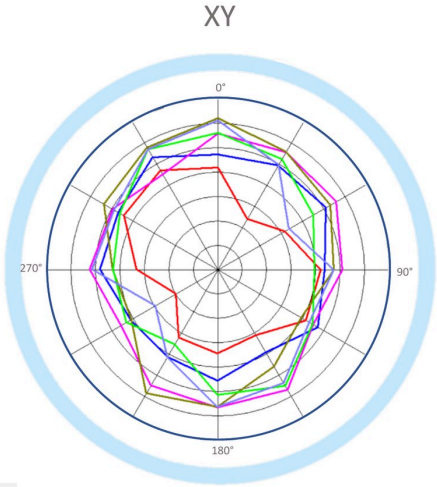

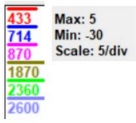

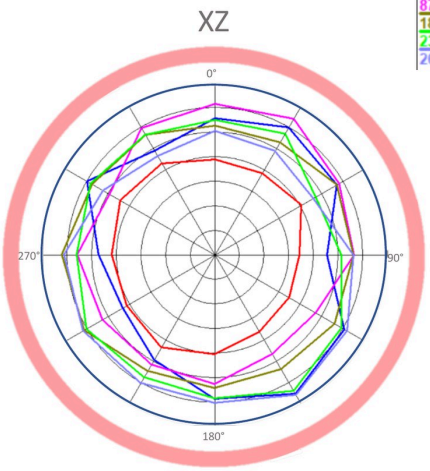

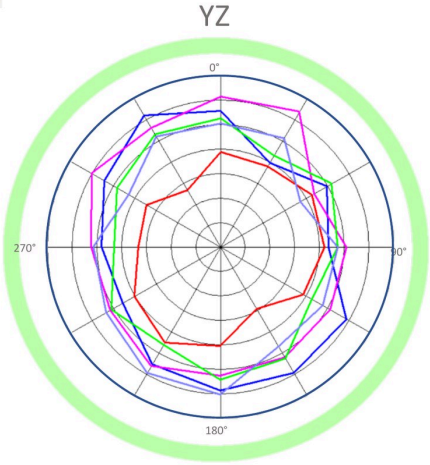

9 3D Radiation Pattern at 880 MHz

FREQUENCY POINT 880 MHZ

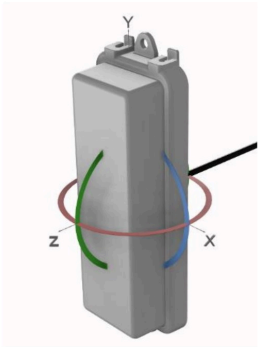

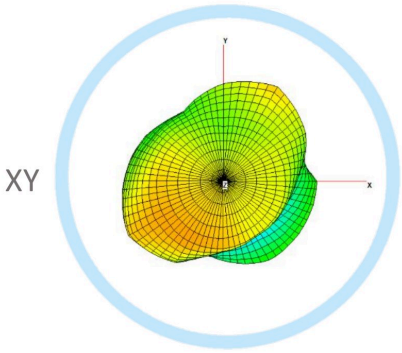

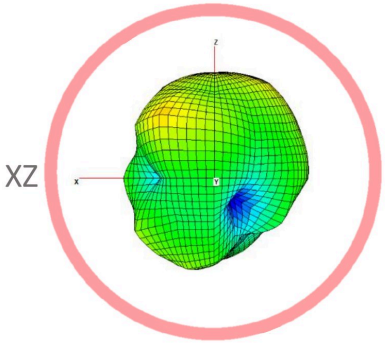

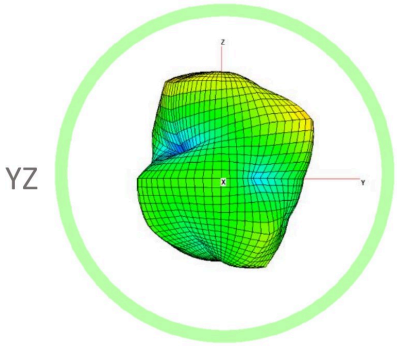

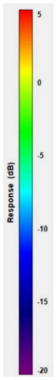

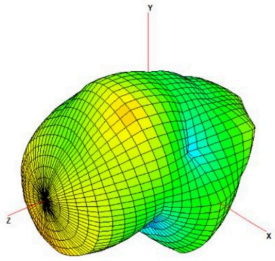

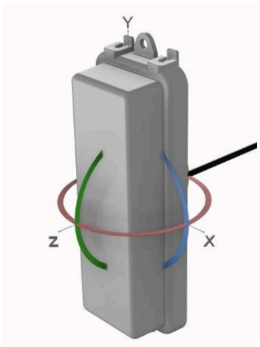

10 3D Radiation Pattern at 1880 MHz

FREQUENCY POINT 1880 MHZ

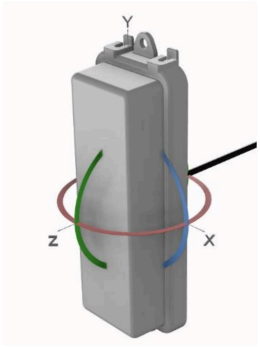

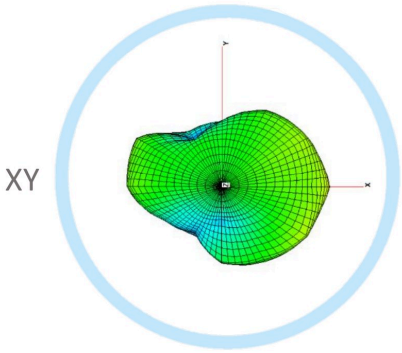

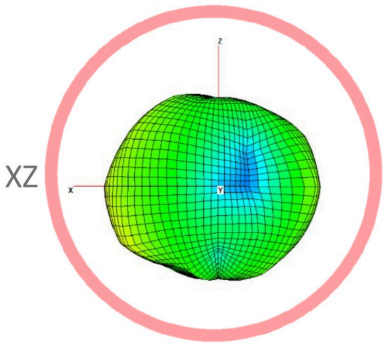

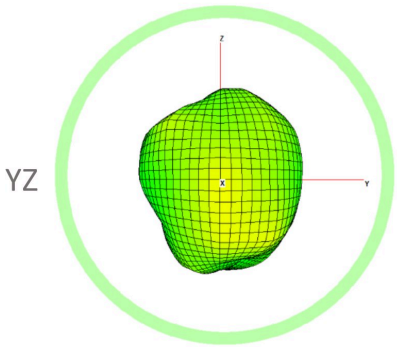

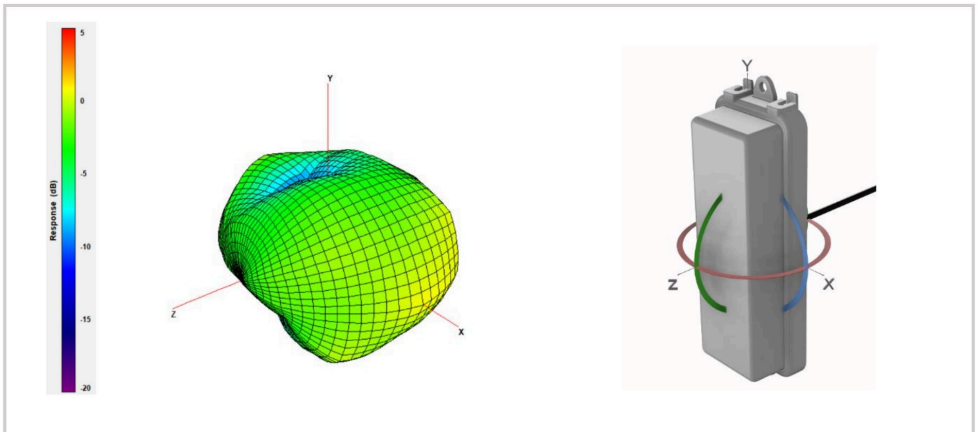

11 Antenna Mechanical Drawing

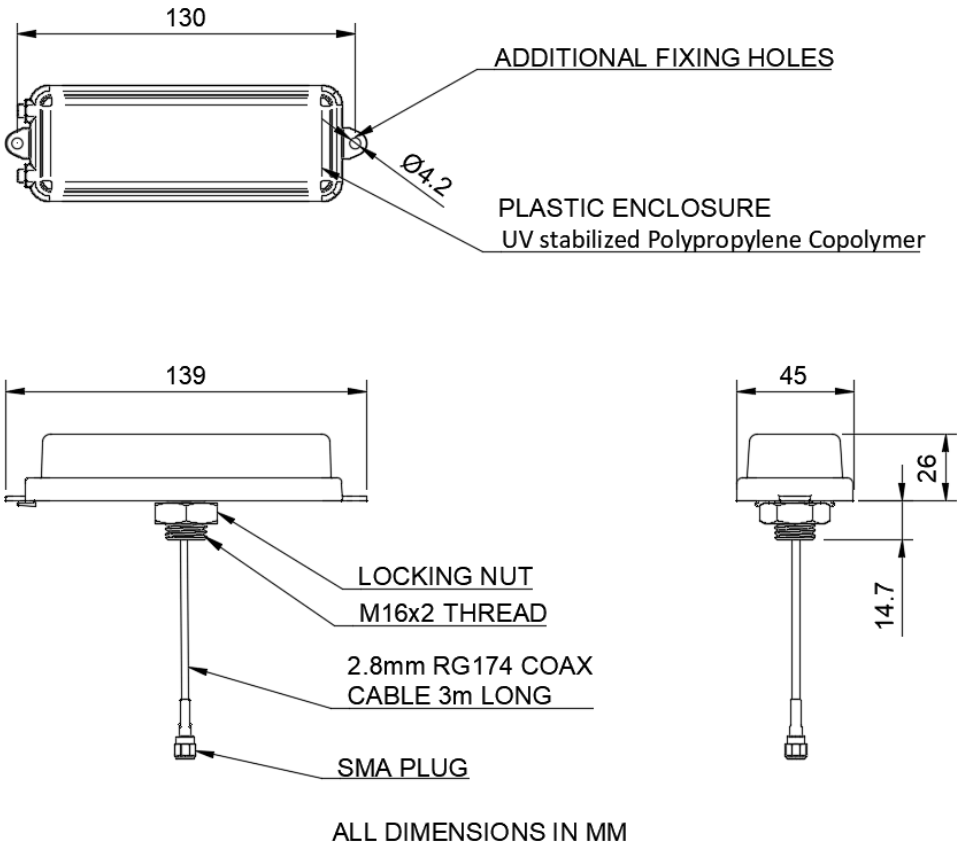

All dimensions in mm

12 Connector

SMA Plug

13 Bag and Packaging Information

- Antennas packed in PE bag (1 per bag)
- Small bag dimensions: 28.5 × 9.5 cm
- 100 pcs per larger PE bag with product label
- Bag dimensions: 30 × 19 cm
- 100 pcs per carton

14 Compliance

ROHS
Compliant
Conforms to EU RoHS Directive 2011/65/EU as amended by Delegated Directive (EU) 2015/863.

REACH
Compliant
Conforms to EU REACH Regulation (EC) No 1907/2006.

CERTIFICATE
On request
A certificate of conformance is available upon request from sales@synzen.com.tw.

Synzen Precision Technology Ltd makes no warranties based on the accuracy or completeness of the contents of this document and reserves the right to make changes to specifications and product descriptions at any time without notice. Synzen reserves all rights to this document and the information contained herein. Reproduction, use or disclosure to third parties without express permission is strictly prohibited.